LiGHT SKY



SIRENA

WATERPROOF LED CITY COLOR

FEATURES

- It is a new waterproof wash light utilizing an RGBL LED color mixing system.
- It offers a wide range of vibrant colors with multiple preset color temperature channels for various scenes.
- Equipped with delicate dimming technology and four dimming curves, it ensures smooth and natural light transitions and excellent beam effects.
- The light can be controlled in segments, colors, independently, and dynamically.
- Features an ultra-bright strobe that maintains brightness even during fast flashing.
- Special tungsten lamp effect at low color temperatures.
- Suitable for both indoor and outdoor use with an IP65 rating.

Unit: mm

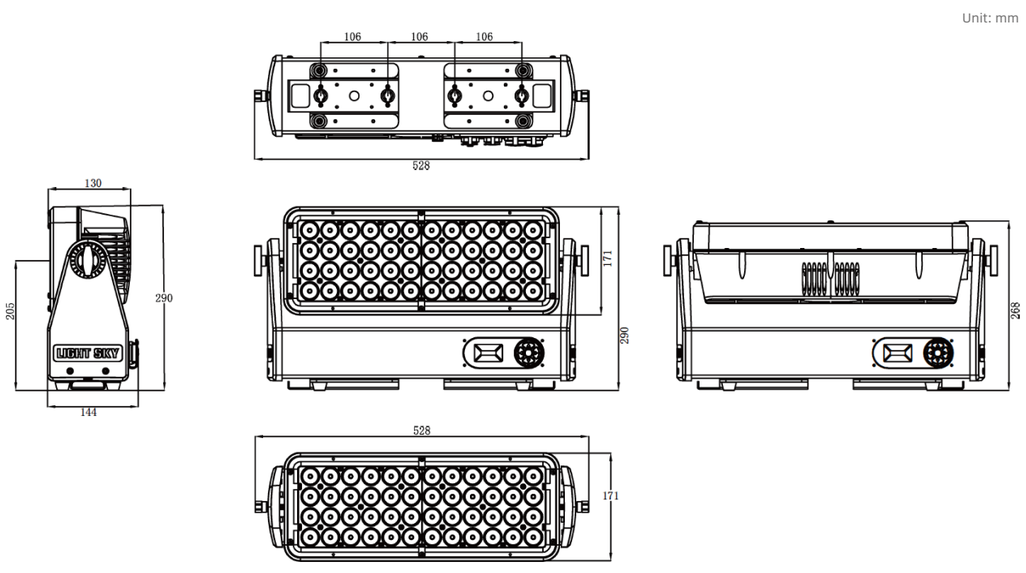

Light source and Optics

- Total lumen output: 27,000 lm
- Light Source: 48 x 15W RGBL 4 in 1 LED
- Colour Temperature Output: 2200K - 8500K
- Lens Angle: 18° (other options available: 15°, 22°, 25°)
- Diffusion Angle: Options include 20°, 30°, 40°, 55°

Effects

- Dimming: 16-bit, 0-100% linear dimming, with four selectable dimming curves.
- Strobe: Electronic strobe with frequencies ranging from 1 to 25 flashes per second, including random strobe.
- LED Refresh Rate: 1000Hz - 25KHz

Control and Programming

- Protocols: DMX512, RDM
- Menu displays device temperature, channel data, and software version information.
- RDM two-way data transmission.
- Channel Mode: 9CH(see channel chart for details)

Software

- Software upgrade via DMX signal interface.
- Intelligent temperature control to ensure LED longevity.
- Silent fan with intelligent temperature detection.

Pan/Tilt Movement

- Manual adjustment for ±100° rotation on the Tilt axis.

Power and Electrical

- Input Voltage Range: VAC 100-240V 50/60Hz
- Max Power Consumption: 620W
- Power factor: 0.996

Size and Weight

- Product Dimensions: 528mm × 144mm × 290mm
- Net Weight: 13.3 kg
- Carton Dimensions: 640mm × 265mm × 365mm
- Gross Weight: 15.6 kg
- Flycase Dimensions(5 in1): 1000mm × 730mm × 470mm
- Flycase Gross Weight(5 in1): 102.2 kg

Other

- IP Rate: IP65
- Operating environment: -20℃ ~ 45℃
- Maximum number of series connections: 2 units at 110V, 4 units at 220V
- Maximum current: 110V maximum current: 5.6A; 220V maximum current: 2.82A
- Optional accessories: Folding barn door module, barn door module, suspension kit

Illumination Diagram

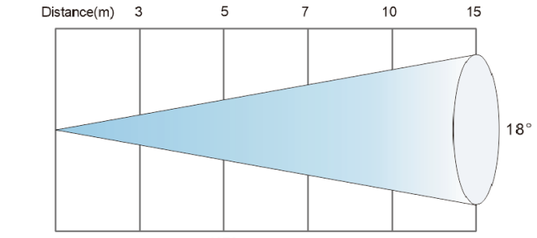

18° Lux	R	3810	1372	700	343	152
	G	6921	2492	1271	623	277
	B	1267	456	233	114	51
	L	7007	2523	1287	631	280
	RGBL	17329	6238	3183	1560	693
Diameter (m)		0.98	1.56	2.21	2.95	4.7

